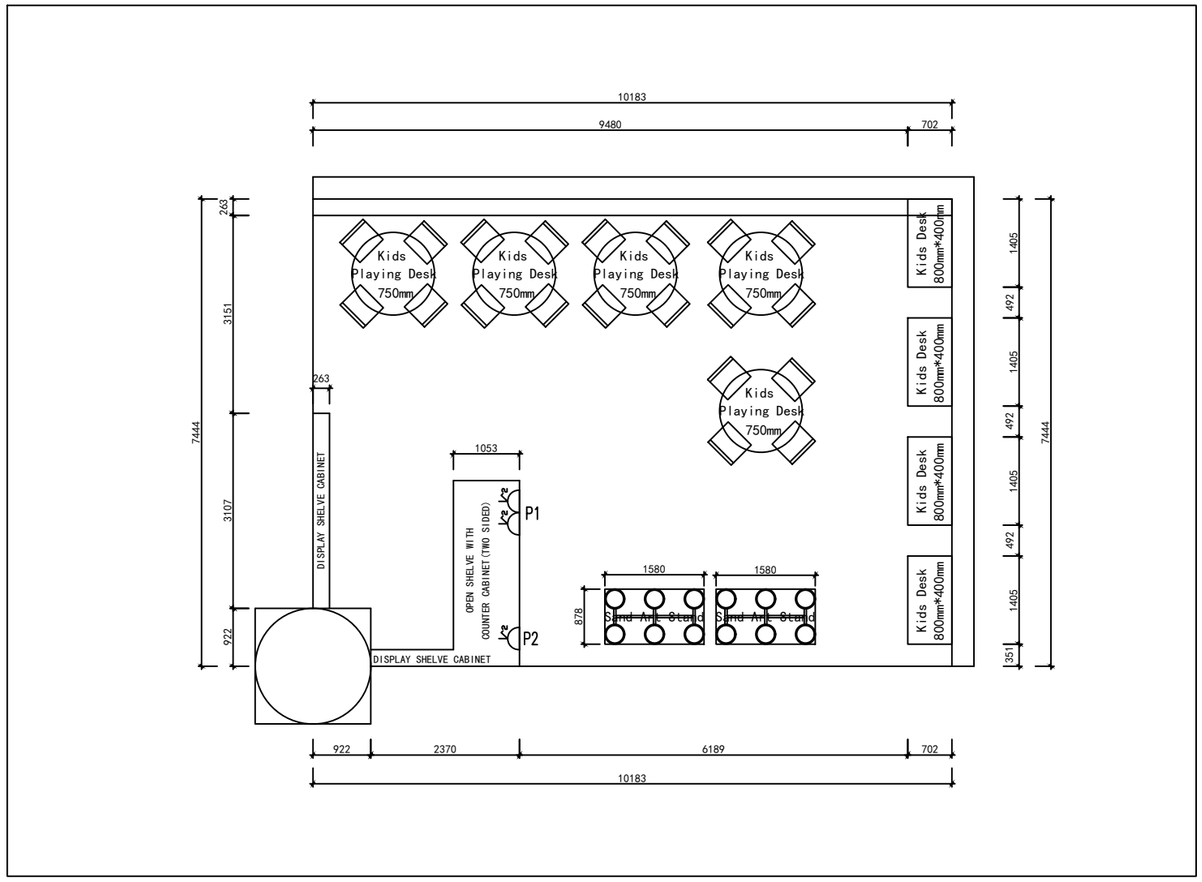

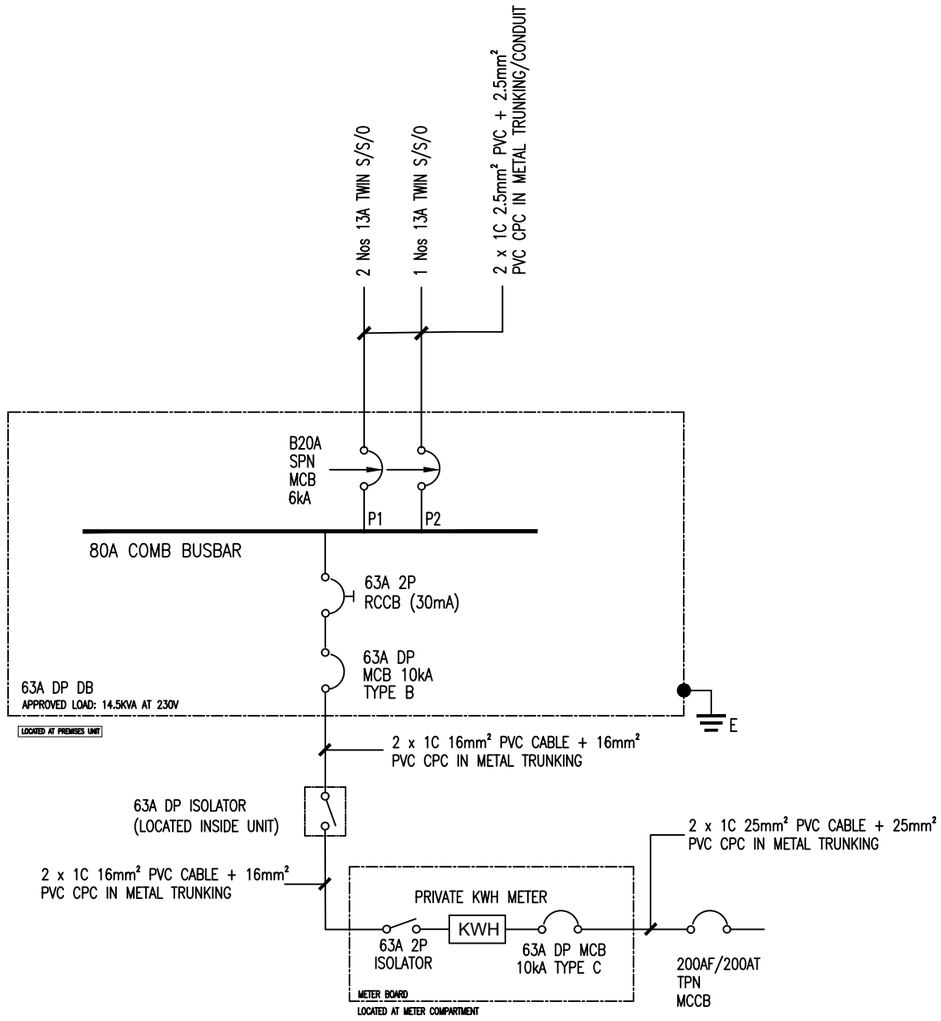

(INCOMING SUPPLY FROM MP-T-2-5 / ELECT.RISER 4)

EMA LICENCED ELECTRICAL WORKER
TECHNICIAN
NYAP JUNN YEAN
8/33613
SINGAPORE

CLIENT / ADDRESS :	CONSULTANT :	ELECTRICAL CONTRACTOR :	DRAWING TITLE :	LEW :	CHECKED :	DATE :
Star Arts CITY SQUARE MALL #02-K2 180 Kitchener Rd, Singapore 208539		I2R M&E PTE. LTD. 709 Yishun Avenue 5 #01-K1 Singapore 760709	ELECTRICAL SERVICES 63A DB SINGLE LINE DIAGRAM	Ryan, Nyap Junn Yean EMA Licence No. : 8/33613 Mobile Number. : 91597207	Ryan	12 DEC 2024
					DRAWING NO. : i2R-CSM-SLD1	REV : 0